GSW-61

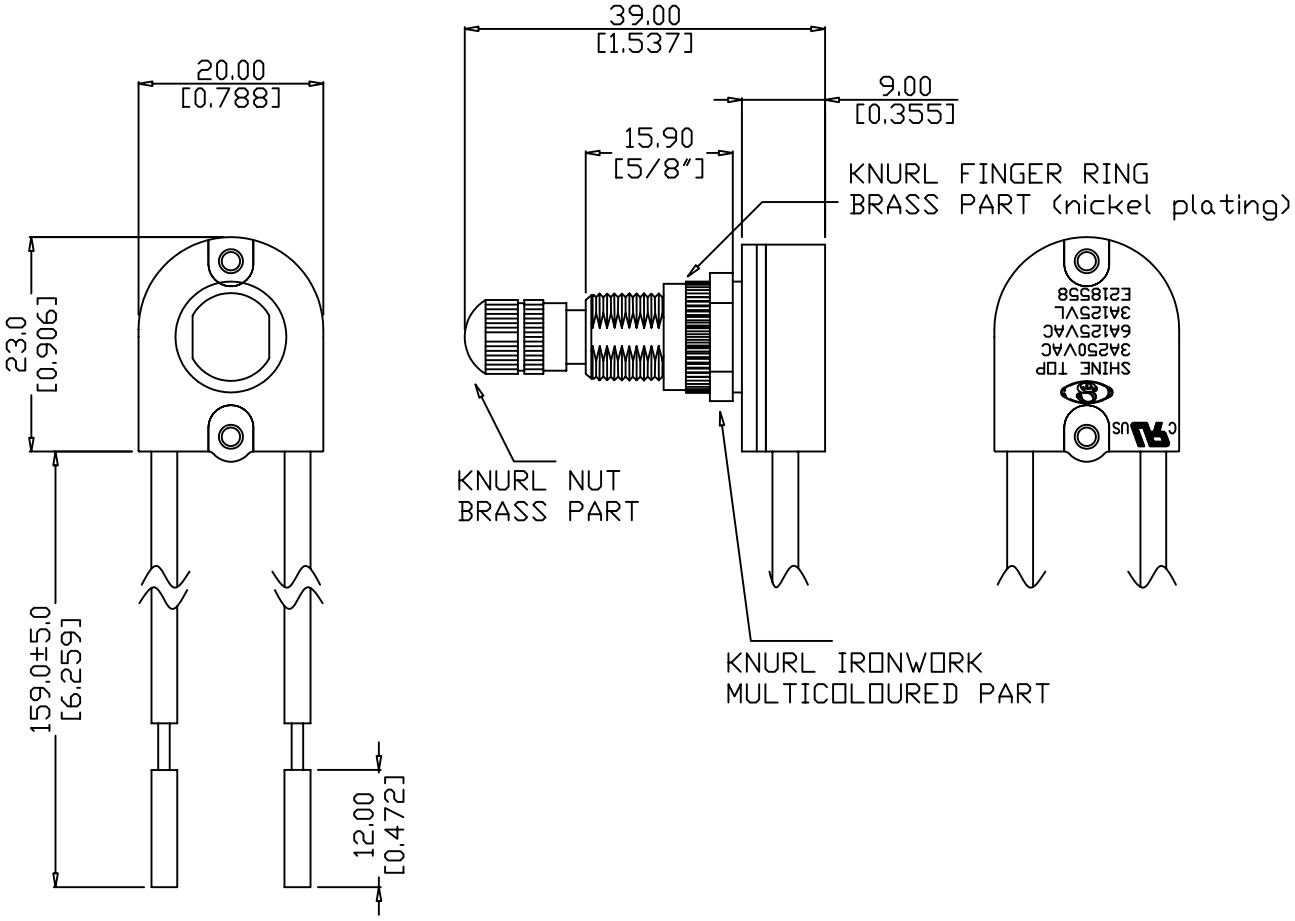
20.00
[0.788]
23.0
[0.906]
159.0±5.0
[6.259]
12.00
[0.472]
39.00
[1.537]
9.00
[0.355]
15.90
[5/8"]
KNURL FINGER RING
BRASS PART (nickel plating)
KNURL NUT
BRASS PART
KNURL IRONWORK
MULTICOLOURED PART
SHINE TOP
3A250VAC
6A125VAC
3A125VL
E218558

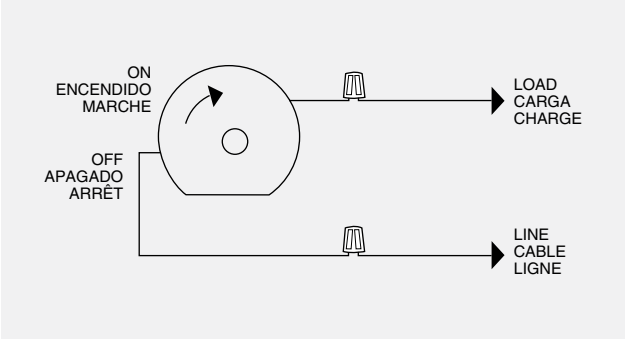
ON
ENCENDIDO
MARCHE
OFF
APAGADO
ARRÊT
LOAD
CARGA
CHARGE
LINE
CABLE
LIGNE